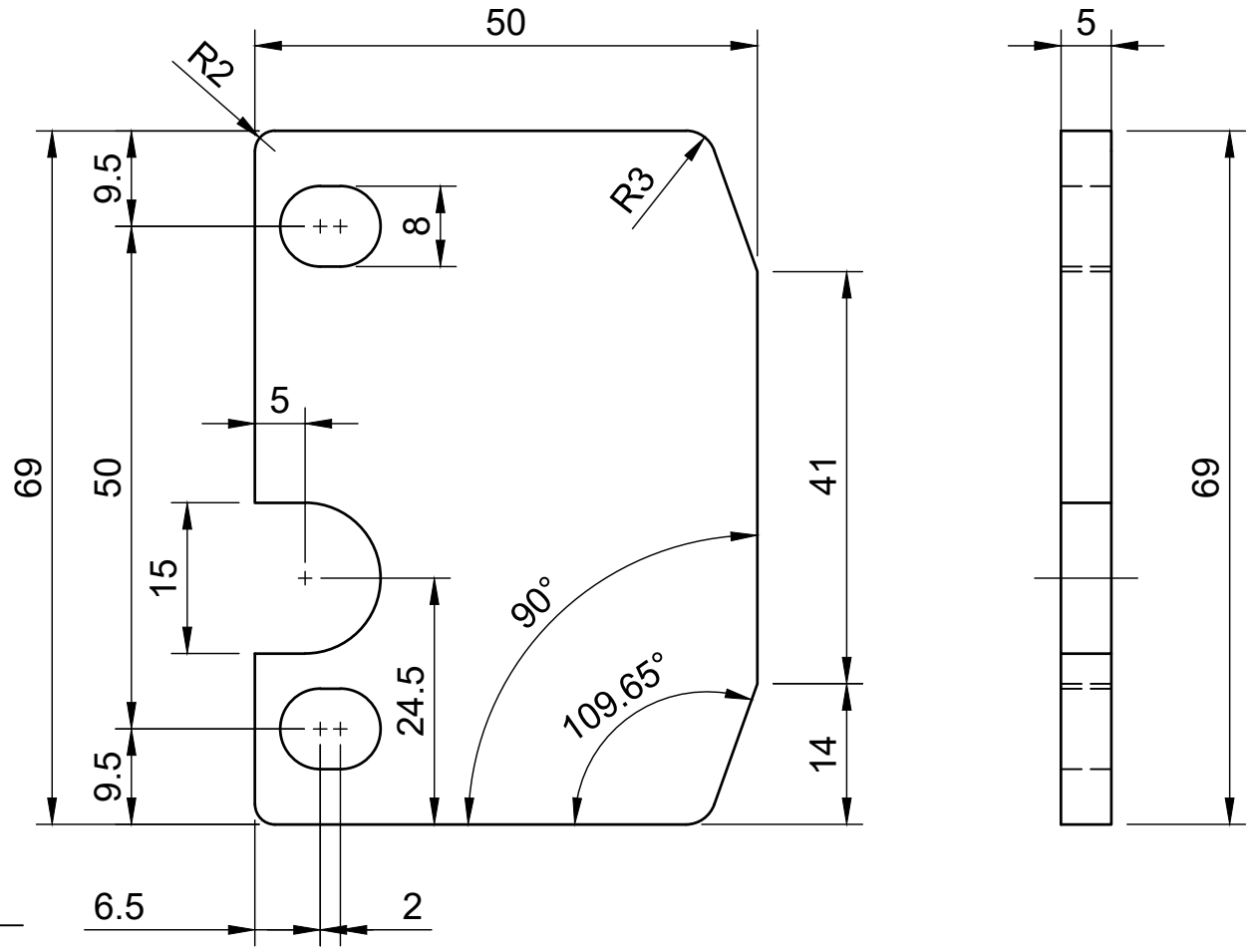

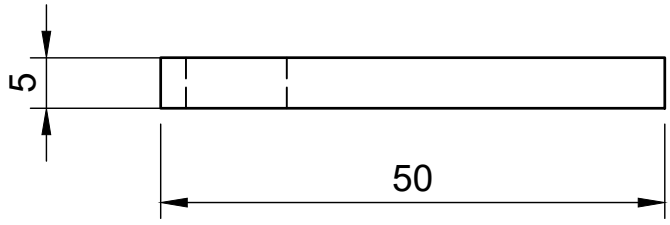

C.E.R. CENTRO EUROPEO RICAMBI, S.L.
POL. IND. CAN SINGLA
08640 OLESA MONTSERRAT (BARCELONA)
TEL.: 93 778 51 42 www.rodamientos-cer.com

Material	Poliamida			C (KN)	Co (KN)
Title	PLACA RASCADORA 3.PC-55				
	P.RAS-55 P				
Created by	Rodamientos CER	DWG No.			
Approved by					Sheet 1/1